1155 Perimeter Center West Suite 650
Sandy Springs, GA 30338

RT-1900S STAQ

Assembly Manual

READ ALL INSTRUCTIONS BEFORE INSTALLING AND USING THIS APPLIANCE

Please read this entire manual before installation and use of this pellet fuel-burning appliance. Failure to follow these instructions could result in property damage, bodily injury, or even death. Contact local building or fire officials about restrictions and installation inspection requirements in your area. Save these instructions.

A MAJOR CAUSE OF FIRES IS FAILURE TO MAINTAIN REQUIRED CLEARANCES (AIR SPACES) TO COMBUSTIBLE MATERIALS. IT IS OF UTMOST IMPORTANCE THAT THIS PRODUCT BE INSTALLED IN ACCORDANCE WITH THESE INSTRUCTIONS.

WARNING & SAFETY INFORMATION

READ ALL WARNING AND SAFETY INFORMATION BEFORE OPERATING GRILL

FOR OUTDOOR USE ONLY. IF USING IN AN OUTDOOR KITCHEN, FOLLOW ALL LOCAL BUILDING CODES

WHEN CONNECTING TO THE RECTEQ APP, ENSURE ALL GRILL FIRMWARE IS UPDATED, IF APPLICABLE

NEVER ATTEMPT TO EMPTY, CLEAR, DISPOSE, OR REMOVE ASHES WHILE GRILL IS HOT. IF YOUR GRILL IS EQUIPPED WITH AN ASH CLEARING LEVER, DO NOT MOVE LEVER UNTIL GRILL IS COMPLETELY COOL

DO NOT STORE OR USE COMBUSTIBLE MATERIALS IN OR NEAR THIS APPLIANCE

NEVER TOUCH OR ATTEMPT TO MOVE GRILL WHILE HOT OR WITHOUT ASSISTANCE

NEVER MOVE YOUR GRILL WHILE IN OPERATION AND ALWAYS LOCK/SECURE WHEELS

YOUR RECTEQ GETS VERY HOT. USE HEAT RESISTANT GLOVES FOR OPENING/CLOSING LID, ESPECIALLY AT TEMPERATURES ABOVE 400°F

KEEP CHILDREN AND PETS AWAY WHILE GRILL IS HOT. USE EXTREME CAUTION WHEN COOKING AT ALL TEMPERATURES

TO PREVENT FLARE UPS, CLEAN/REMOVE RESIDUAL GREASE FROM DRIP PANS, GRATES, AND BOTTOM OF GRILL REGULARLY, ESPECIALLY PRIOR TO COOKING ABOVE 350°F

UNPLUG OR REMOVE FROM POWER VIA MASTER POWER SWITCH WHILE NOT IN USE

NEVER STORE ANY GRILL IN A SMALL SPACE OR PLACE IN A VEHICLE UNLESS COMPLETELY COOL AND FIRE IS VERIFIED AS EXTINGUISHED

LEAVE A MINIMUM OF 18” CLEARANCE FROM THE UNIT TO COMBUSTIBLE CONSTRUCTION AND/OR MATERIALS AT THE REAR, SIDES, AND TOP

USE ON LEVEL GROUND AND NEVER USE UNDER COMBUSTIBLE CEILINGS OR OVERHANGS

NEVER USE ON A COMBUSTIBLE FLOOR. USE ON A NONCOMBUSTIBLE FLOOR OR FLOOR PROTECTED WITH NONCOMBUSTIBLE SURFACE WHERE PROTECTIVE SURFACE HAS BEEN APPROVED FOR SUCH USE BY THE AUTHORITY HAVING JURISDICTION

WARNING & SAFETY INFORMATION

READ ALL WARNINGS AND SAFETY INFORMATION BEFORE OPERATING GRILL

NEVER PLUG IN YOUR GRILL WITHOUT ALL SERVICE ACCESS GRATES/PANELS INSTALLED

OCCASIONALLY, YOUR FIRE POT, VENTS/SMOKESTACKS SHOULD BE INSPECTED FOR OBSTRUCTIONS TO MAKE SURE PROPER AIRFLOW AND PROPER VENTILATION IS MAINTAINED

USE HEAT-RESISTANT MITTS OR GLOVES WHEN HANDLING FOOD, PANS, GRATES, ETC. WHILE OPERATING THIS UNIT. LONG HANDLED, NON-PLASTIC UTENSILS ARE ALSO RECOMMENDED

BE AWARE OF AND/OR REMOVE LOOSE CLOTHING, JEWELRY, AND ACCESSORIES BEFORE USING GRILL

BEFORE COVERING YOUR GRILL, MAKE SURE THAT THE GRILL HAS COOLED COMPLETELY

NEVER PUT YOUR HAND IN THE PELLET HOPPER OR ATTEMPT TO SERVICE ANY PART OF YOUR GRILL WHILE YOUR GRILL IS PLUGGED IN. KEEP ALL PROTECTIVE GUARDS IN PLACE

<u>CARBON MONOXIDE WARNING:</u>
FOLLOW THESE GUIDELINES TO PREVENT THIS COLORLESS, ODORLESS GAS FROM POISONING YOU, YOUR FAMILY, OR OTHERS.
KNOW THE SYMPTOMS OF CARBON MONOXIDE POISONING: HEADACHE, DIZZINESS, WEAKNESS, NAUSEA, VOMITING, SLEEPINESS, AND CONFUSION. CARBON MONOXIDE REDUCES THE BLOOD'S ABILITY TO CARRY OXYGEN. LOW BLOOD OXYGEN LEVELS CAN RESULT IN LOSS OF CONSCIOUSNESS AND DEATH.
SEE A DOCTOR IF YOU OR OTHERS DEVELOP COLD OR FLU-LIKE SYMPTOMS WHILE COOKING OR IN THE VICINITY OF THIS APPLIANCE. CARBON MONOXIDE POISONING, WHICH CAN EASILY BE MISTAKEN FOR A COLD OR FLU, IS OFTEN DETECTED TOO LATE.
ALCOHOL CONSUMPTION AND DRUG USE INCREASE THE EFFECTS OF CARBON MONOXIDE POISONING.
CARBON MONOXIDE IS ESPECIALLY TOXIC TO MOTHER AND CHILD DURING PREGNANCY, INFANTS, THE ELDERLY, SMOKERS, AND PEOPLE WITH BLOOD OR CIRCULATORY SYSTEM PROBLEMS, SUCH AS ANEMIA, OR HEART DISEASE.

Welcome to the recteq family!

Congratulations on the purchase of your new recteq wood fired pellet grill. With proper care and maintenance, your recteq will provide you years of trouble-free operation. Please review the following information carefully for useful tips and information that will help you utilize your grill's extensive features and benefits.

To see our favorite recipes and cooking tips, visit recteq.com. As you become familiar with your recteq, you will find that indoor cooking becomes the exception and not the rule in your house. With the ability to easily cook foods that meet or often exceed restaurant quality, you will no longer want to dine out and pay for food that does not live up to the recteq standard. Also, don't be alarmed when your neighbors call and ask if you will 'recteq' some meat for them...This is a common occurrence among recteq owners.

We invite you to join the vibrant and growing recteq social media community. Whether you want to contribute your own tips and recipes, learn from others, or a bit of both, please jump right in. You now have an incredible tool for cooking. Let's see how you use it!

Thank you for choosing recteq.

Ray Carnes & Ron Cundy Co-Founders, recteq, LLC

CONTENTS

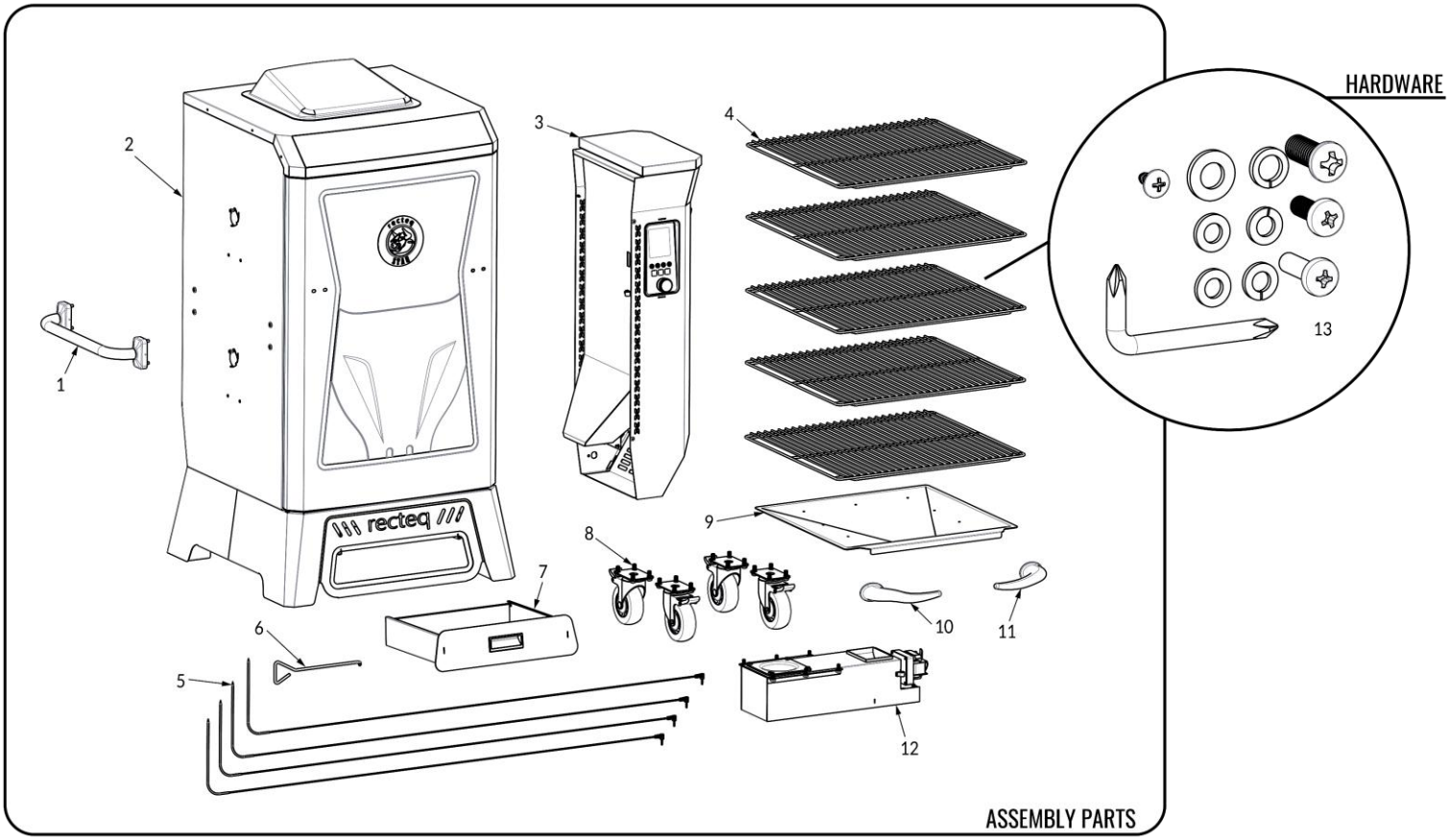

1. Pull-Bar and Brackets
2. Vertical Smoker Body
3. Hopper
4. Grates (5x)
5. Right-Angle Meat Probe
6. Grate Puller
7. Grease Drawer
8. Caster Wheels (4x)
9. Drip-Pan
10. Left Bull-Horn Handle
11. Right Bull-Horn Handle
12. Airbox
13. Hardware Package

ASSEMBLY

Step 1: Unpack and Prepare for Assembly

Remove and unwrap all items from grill body.

WITH ASSISTANCE, lay grill body on its back using packing material to protect from damage. Be aware of sharp edges and points while assembling.
Note: All hardware is labelled for assembly use on hardware pack

Step 2: Attach Airbox

Starting with grill body on its back, attach airbox (item 12) with 6 small bolts, lock washer, and flat washers. (see diagram).

Hand-tighten all bolts before tightening with screwdriver or drill.

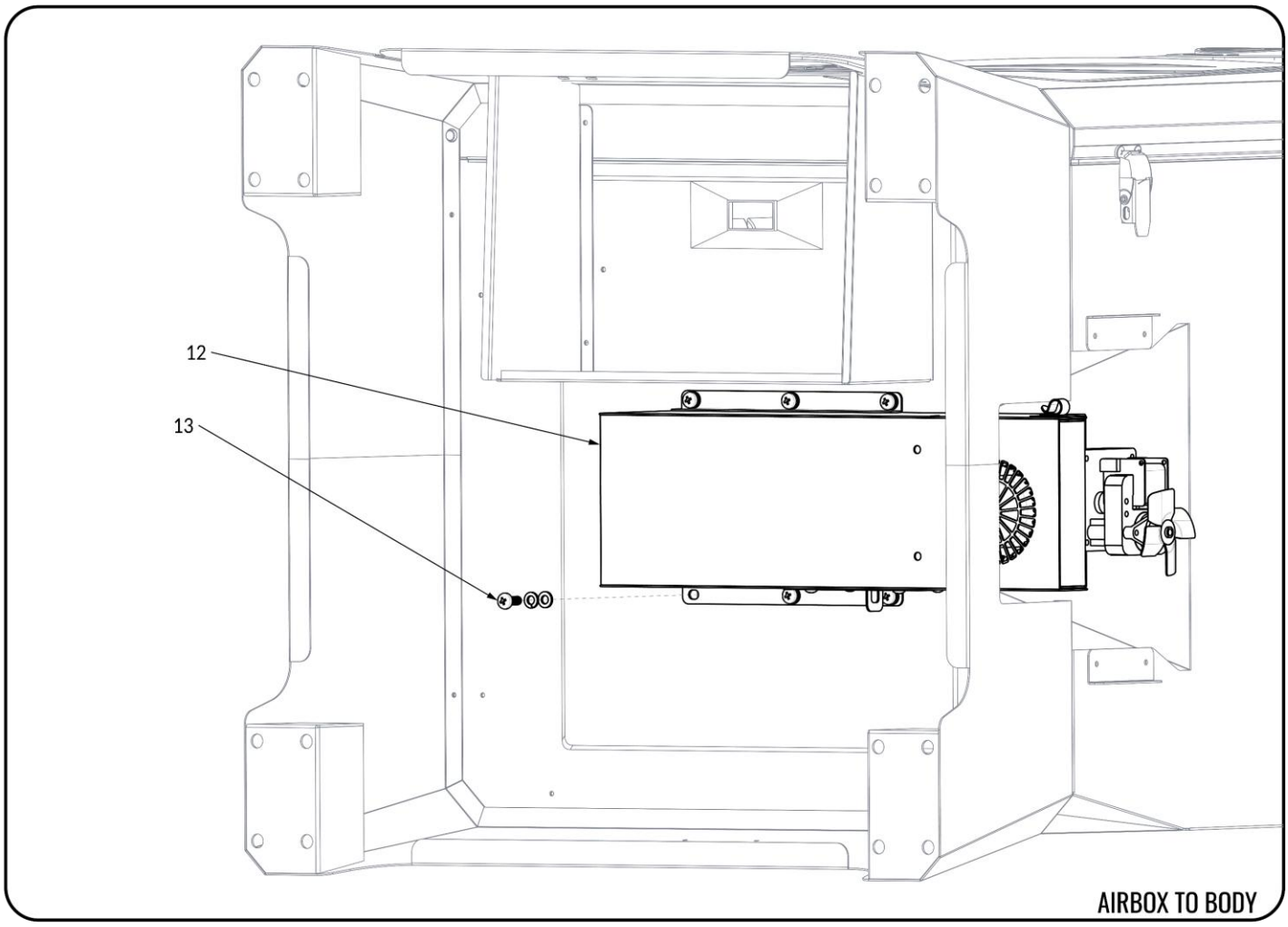

ASSEMBLY

Step 3: Attach Caster Wheels

With the grill body still on its back, attach caster wheels (item 8) with 4 small bolts, lock washer, and flat washers, for each wheel. (see diagram).

Hand-tighten all bolts before tightening with screwdriver or drill.

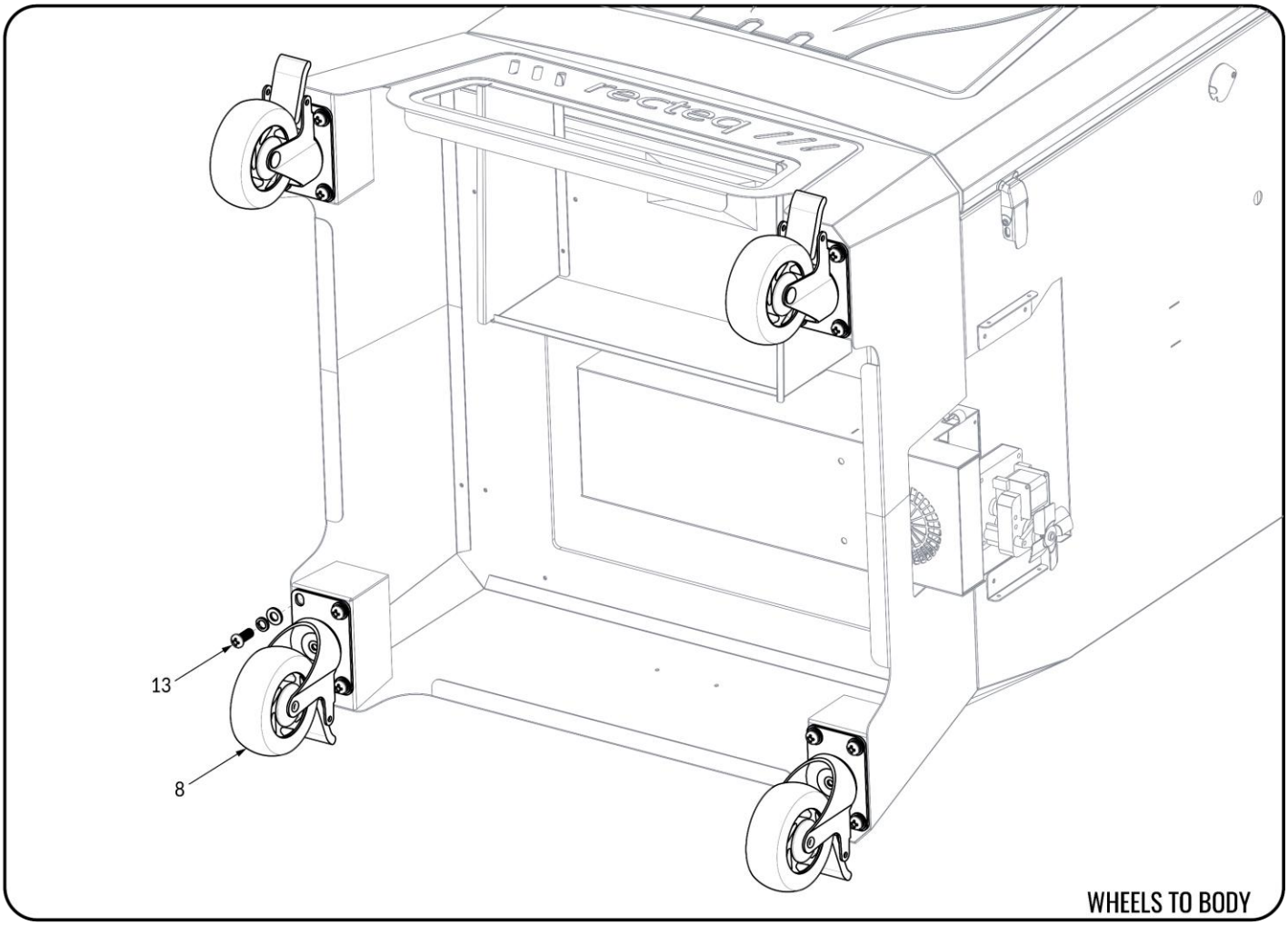

Step 4: Attach RTD Connectors

Stand the grill upright on its wheels and lock them.

With a friend, hold the hopper (Item3) upright. Connect the RTD wires together (see diagram).

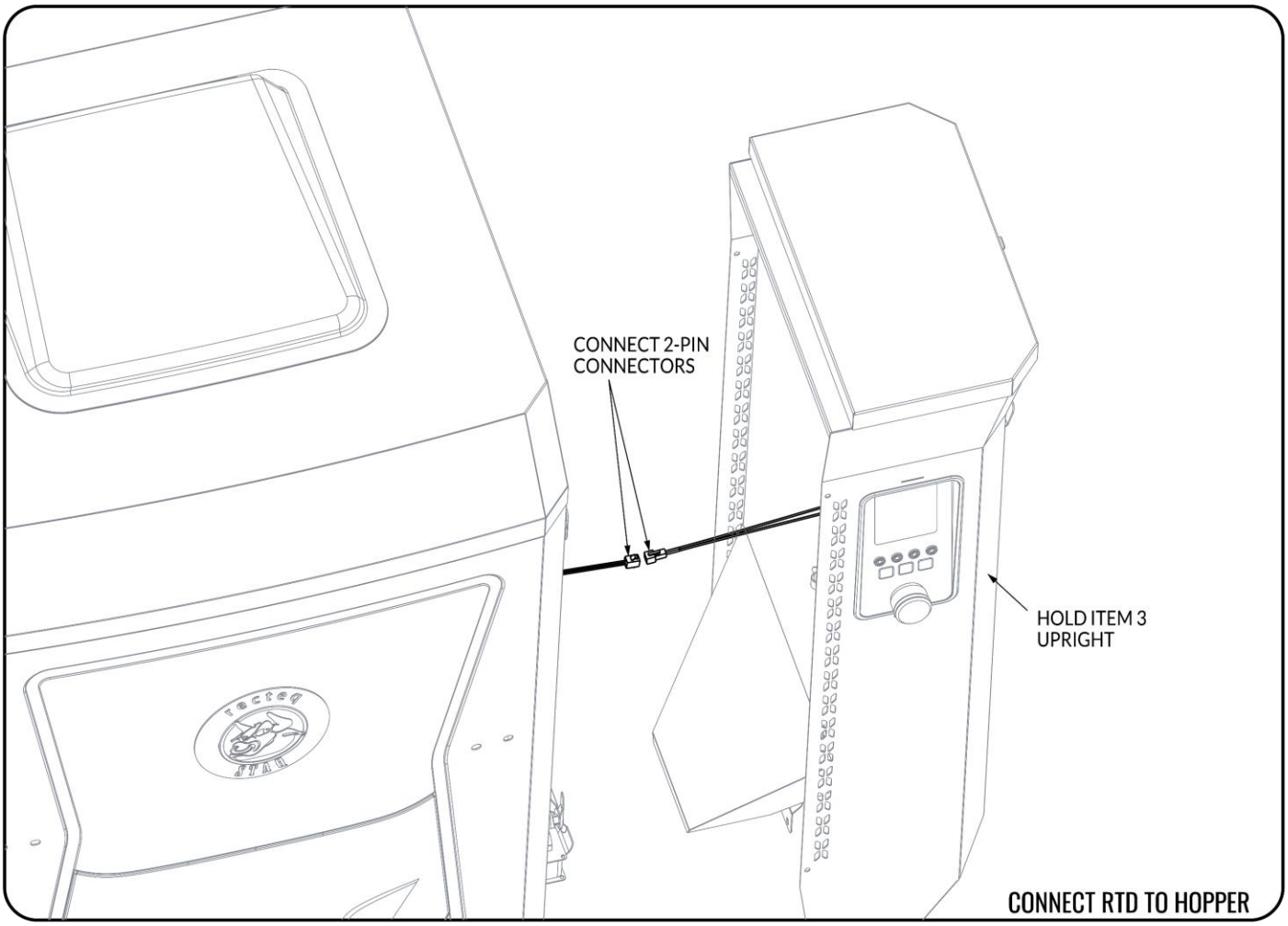

Step 5: Hang Hoper on Grill Body Hooks

Hang the hopper (Item 3) on the tabs on the side of the grill body.

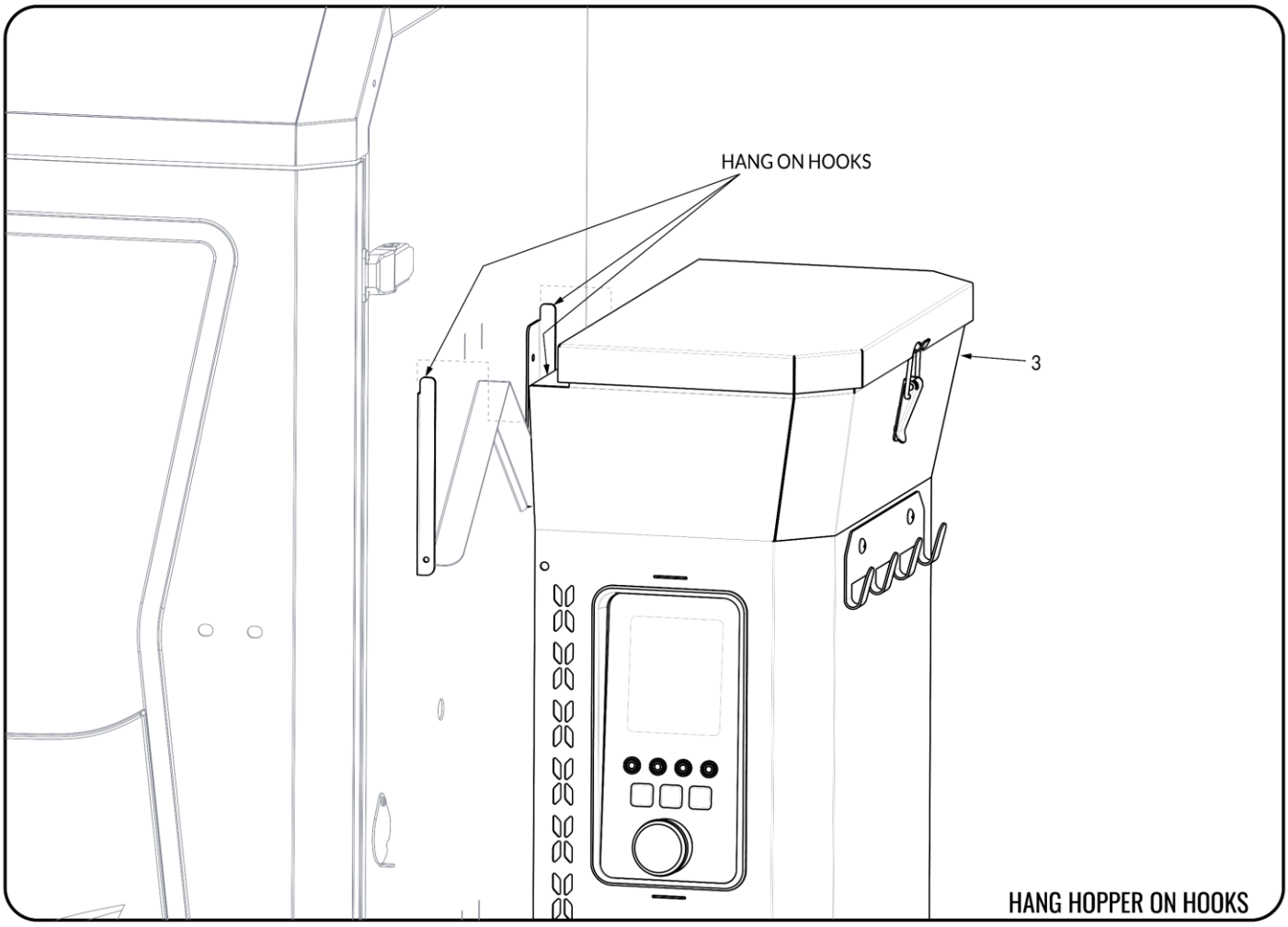

Step 6: Attach Hopper to Grill Body.

Attach the hopper (Item 3) with 4 screws to the grill body.

Remove the two screws holding the lower hopper grate in place and set the lower hopper grate and screws aside for later re-attachment.

Attach the hopper to the airbox with 2 screws.

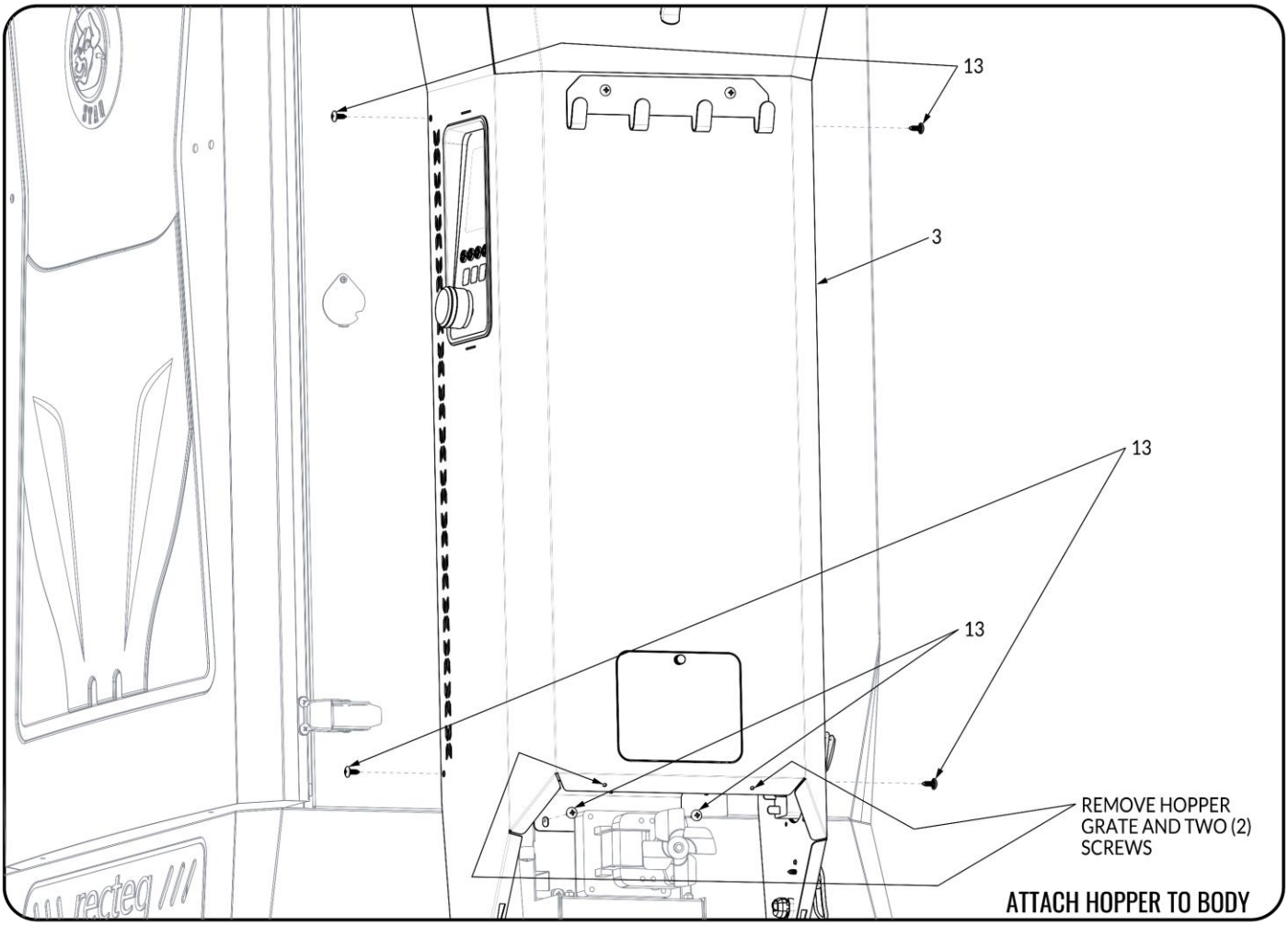

Step 7: Connect Airbox to Hopper

Connect the 4-pin connector from the airbox to the 4-pin connector from the hopper (See Diagram).

Re-attach the lower hopper grate.

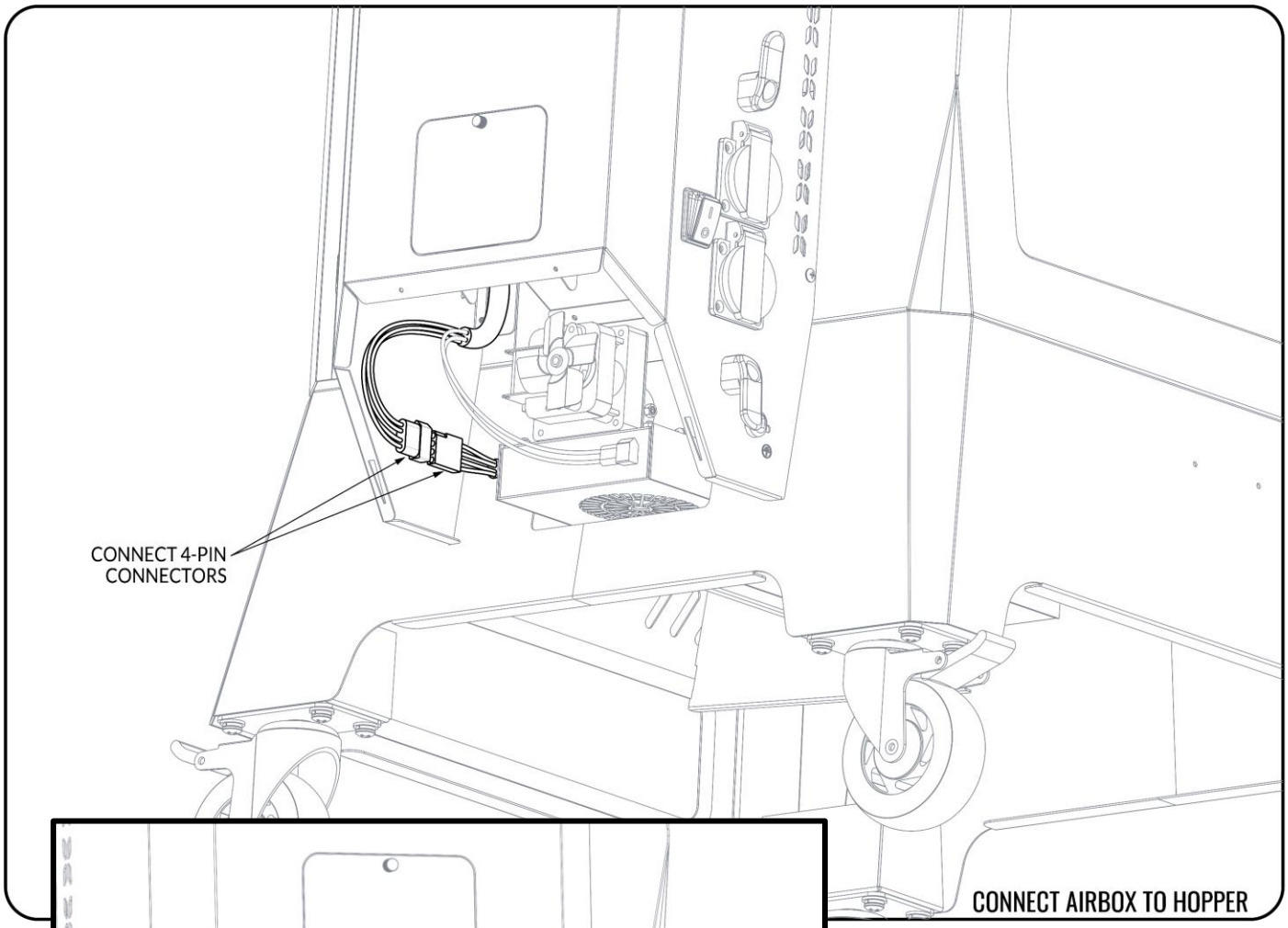

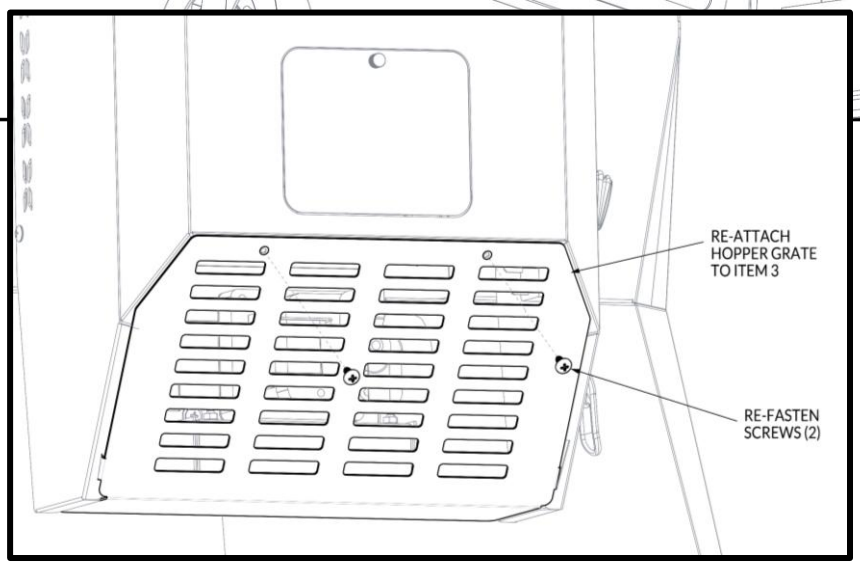

Step 8: Attach Bull-Horn Handles

Attach left and right bull-horn handles (Items 10 and 11) with pre-assembled hardware to the grill door.

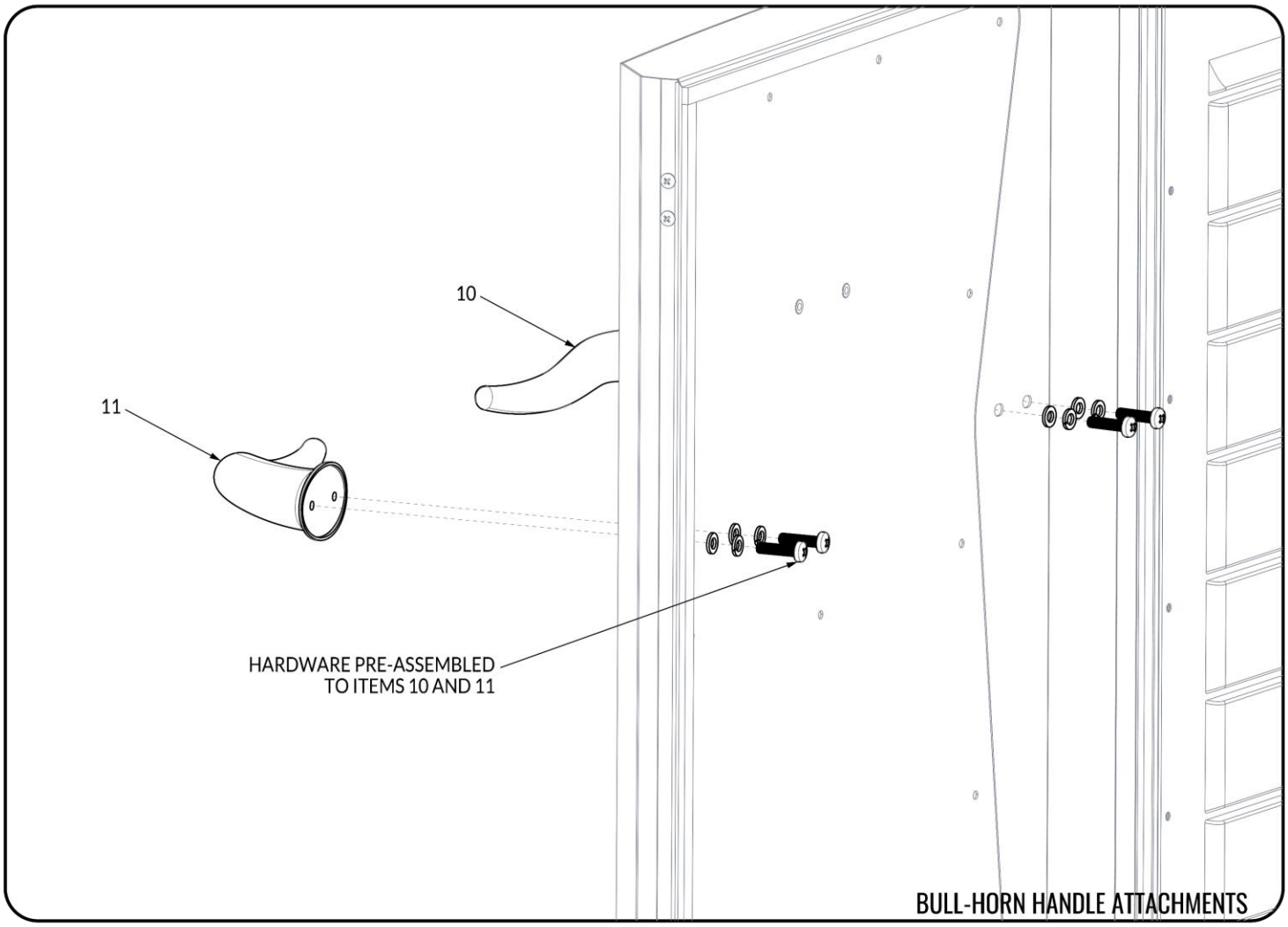

Step 9: Attach Pull-Bar

Attach pull-bar (Item 1) to side of grill with pre-assembled hardware.

Once the hardware is attached, slide the cover over them and snap them in place, both top and bottom (see diagram).

*Note This is the same attachment location for the side folding shelf accessory (not included).

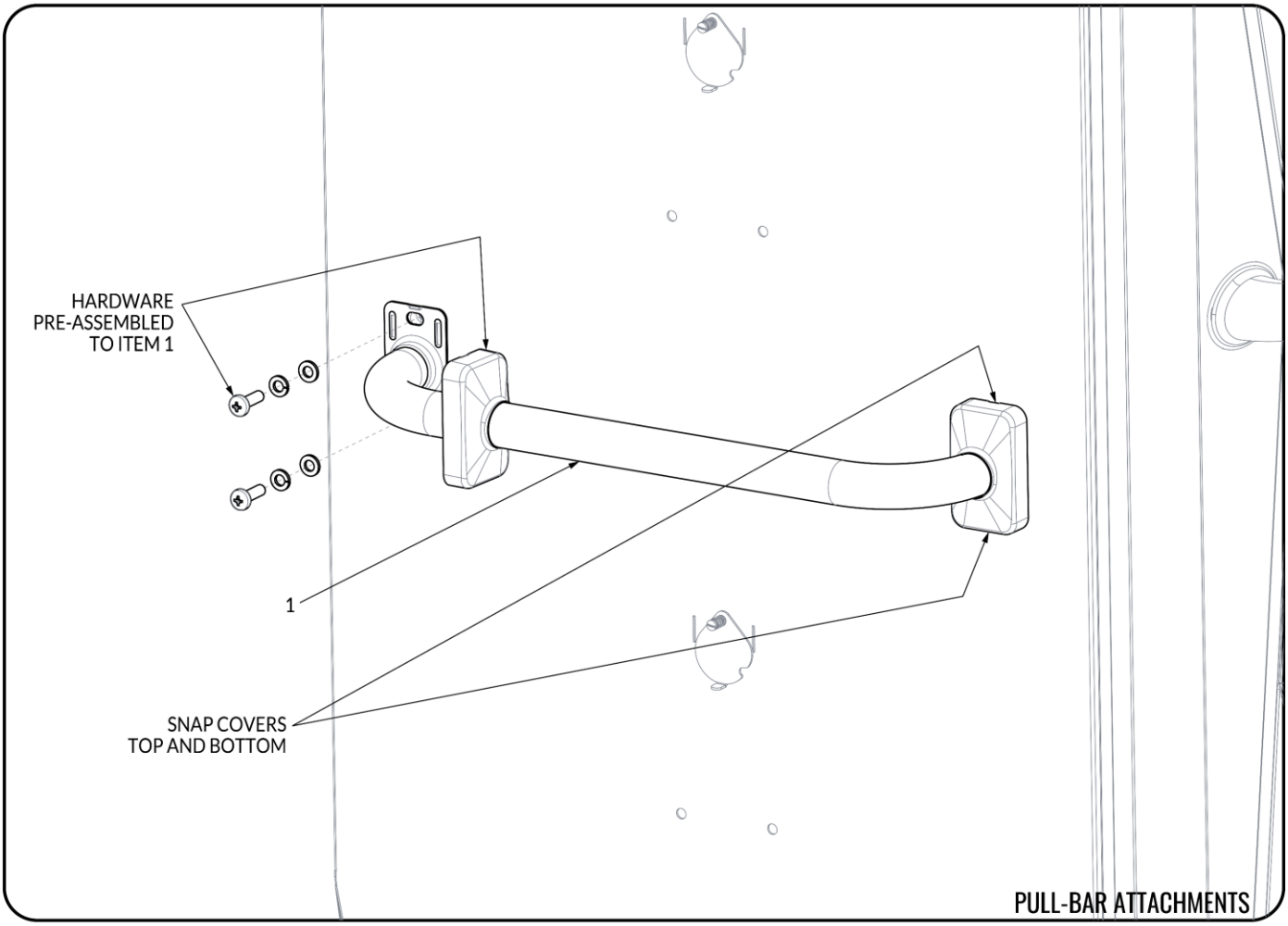

Step 10: Install Grease Drawer, Grill Grates, and Drip Pan

Install grease drawer into the opening as shown.

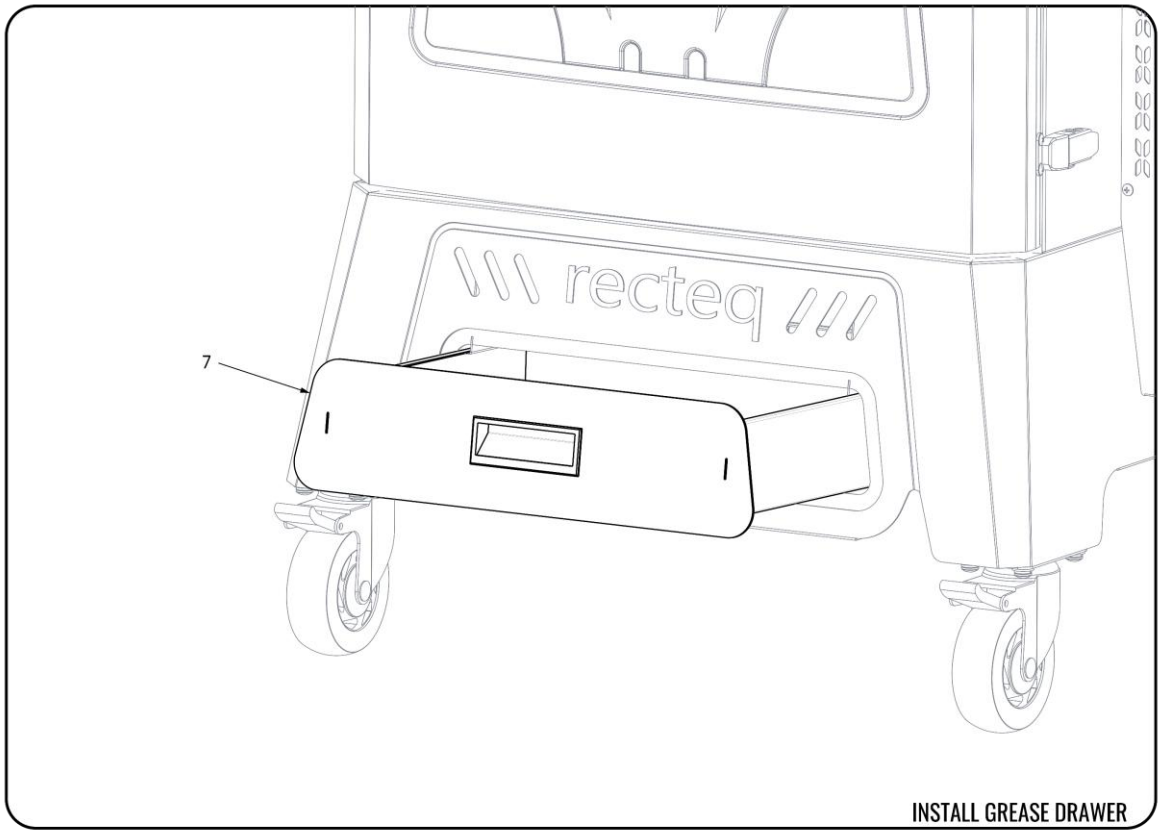

Inside the grill, insert the grates into the grooves on the interior walls

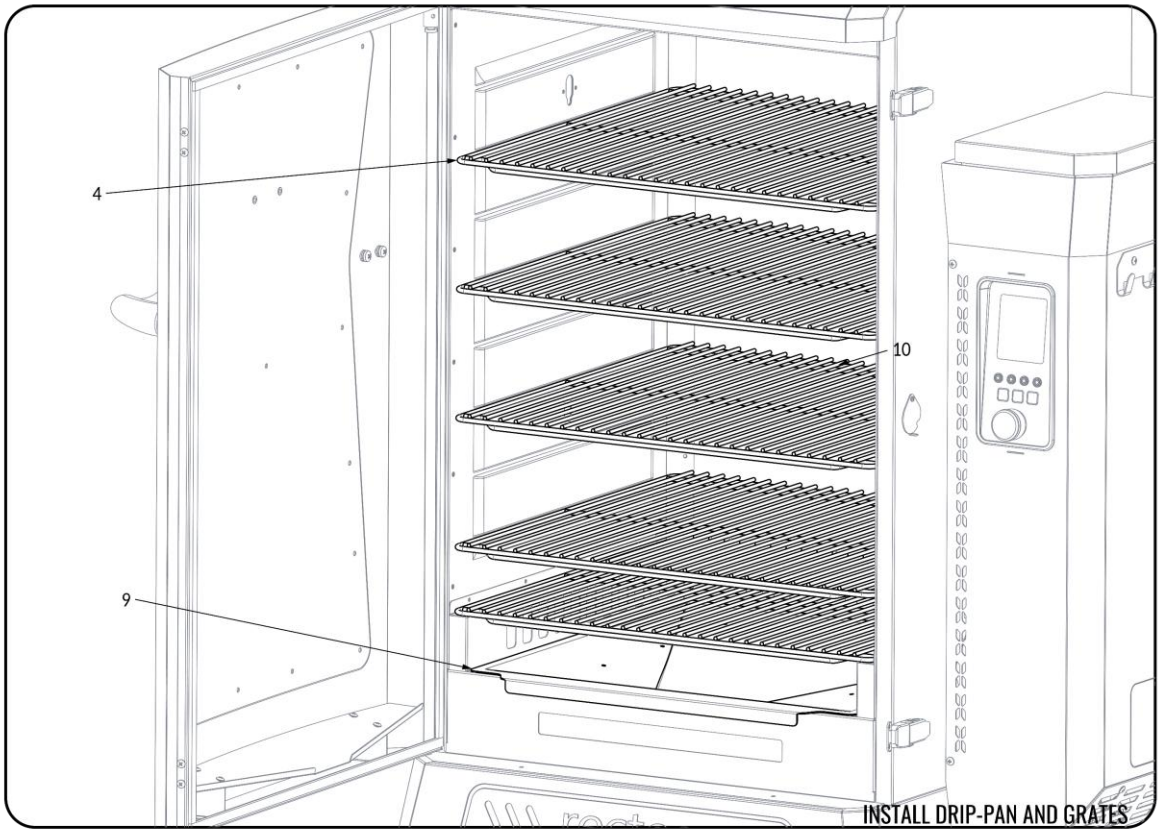

INITIAL SETUP PROCEDURE

Before cooking for the first time, we recommend you remove the cooking grates and wash them with mild soap and water. Fill your hopper at least halfway and place a 1/4 cup of pellets in the firepot. Reinstall the drip pan and grates and set grill to 400˚F. Once the grill reaches 400˚F, let it run with the door closed for 1 hour. This will provide a final cure and remove any residue that may have accumulated during manufacturing and shipping. After this initial burn, your grill is ready for cooking.

OPERATING YOUR GRILL

WIFI: Download the recteq app from Apple App Store for Apple devices or Google Play for Android devices, and follow the directions on app. Be sure to update any applicable firmware.

WIFI Troubleshooting: Go to *recteq.com/wifi-setup or call (706)922-0890*

DO NOT MANUALLY FILL YOUR FIREPOT WITH PELLETS.

DO NOT OVERFIRE OR ATTEMPT TO ACCELERATE THE NATURAL LIGHTING SEQUENCE OF YOUR GRILL.

Press power button to turn grill on and adjust temperature knob to desired temperature.

- **Leave door unlatched until initial lighting is complete and temperature starts to climb**
- Turning the grill ON illuminates the digital readout and activates the startup sequence that powers the ignitor, blower fan, and auger. (auger turns intermittently, by design)
- If your grill fails to light itself within 30 minutes of startup, the Smart Grill Technology™ processor will turn the grill off and display ER-2 on the screen.
- Pressing the power button again activates the shut-down mode of your grill. If the grill's actual temperature is below 150˚F, pressing the power button will simply turn the grill off.
- When the power button is used to shut down your grill, the Smart Grill Technology™ processor will stop adding pellets to the fire pot and the fan will continue running to completely burn the pellets remaining in the fire pot. During this cooling process, the display screen will display FAN. Shortly thereafter, the display screen will change to display AUG - this will push out any embers left in the auger tube.
- When meat probes are not in use, protect the probe ports by utilizing the rubber probe port protectors.

Temperature Control Knob: Turn knob to select computer-maintained temperature.

OPERATING YOUR GRILL

Settings Button: Press and hold the settings button to access the adjustable parameters menu. Short presses of the settings button will scroll through the adjustable parameters. Pressing and holding the settings button will exit the adjustable parameters menu.

Test Mode: With the grill OFF, press and hold the Settings Button to enter the Adjustable Parameters Menu. Enter Test Mode from either of the five screens AUG, OFS, PrA, PrB, or rSt by pressing the Power Button. Each additional press of the Power Button will advance you through the 8 Test Mode screens. The last screen is the BYE screen. While on the BYE screen, press the Settings Button to return to the adjustable parameters screen, then press and hold the Settings Button and your grill's controller will return to the OFF state.

Adjustable Parameter 1

1 AUG

30

Adjustable Parameter 2

2 OFS

0

Probe A Calibration

3 PrA

0

Probe B Calibration

4 PrB

0

Adjustable Parameter 1: Min Feed Rate - Min Feed Rate is the minimum rate that the auger is allowed to feed fuel to the fire pot, regardless of Set Point. Decreasing the value will allow the grill to achieve lower temperatures but will increase the risk of flame-outs. Increasing the value will prevent losing fire but will limit your ability to maintain low temperatures. *Note: Changing this does not change the auger speed. The auger speed is constant.*

Turning the Temperature Control Knob clockwise will increase, and turning counterclockwise decrease, the value within the range of 5 - 250.

Due to varying qualities of pellet brands, we give you the ability to adjust your minimum feed rate downward in the event that your grill is running hot at lower temperatures. However, if you experience a sudden loss, followed by an immediate increase in grill temperature, then your grill has experienced a flame out and will automatically relight. This may signify that your minimum feed rate was adjusted too low and needs to be increased.

Adjustable Parameter 2 and Probe Calibration: Temperature Offset - Your grill and probes have been precisely calibrated at our facility, but the Temperature Offset allows you to customize how your controller will report temperature. Should you choose to rely on a secondary temperature probe, you can use the following process to recalibrate your Smart Grill Technology Controller. You can also change the calibration of each meat probe port if needed.

The current temperature offset percentage value will be displayed. Turning the Temperature Control Knob clockwise will increase, and turning counterclockwise decrease the value, respectively.

TEST MODE

VEr XXX

VEr ###

To enter test mode: Press and hold Settings for 3 seconds - Press Power repeatedly until you see AUG.

VEr XXX displays current firmware version.

Screen 5-1

5-1 AUG

Screen 5-1 is test mode for your auger motor. You should be able to look in your grill's firepot and see the end of the auger turning very slowly.

Screen 5-2 is test mode for your grill's ignition system. You should be able to look into the firepot and see your igniter begin to glow within a few minutes.
DO NOT TOUCH THE IGNITER.

Screen 5-3

5-2 IGN

0

Screen 5-3 is test mode for your grill's blower fan. You should be able to hear the fan blowing.

Screen 5-3

5-3 FAN

0

Screen 5-4 is test mode for your grill's control knob. You can turn the knob to see the 000 value increase and decrease as you turn the knob.

Screen 5-4

5-4 NOb

000

Screen 5-5 is test mode for your grill's temperature sensor and Probe A / Probe B. You can see the temperature values for each displayed on the screen (a value of - - - means the probe is not plugged in or the grill's sensor is not connected).

Screen 5-6 is an internal quality control screen that has no function for the user.

Screen 5-5

5-5 Actual 85°F

-- - Probe A -- - Probe B

-- - Probe C -- - Probe D

Screen BYE is the final screen of test mode. Pressing the power button again will return you to Screen 5-1. Pressing the settings button will return you to the Settings Menu, at which time you can hold the Settings Button to exit Settings Menu and get back to a blank screen.

Screen 5-6

5-6 UF1

Screen BYE

BYE

SHUTTING OFF GRILL

When you are done cooking, simply press the power button. The blower fan will run continuously and will shut off on its own. Then the auger will feed pellets to conclude the shut- down process. This pushes any smoldering pellets in the auger tube into firepot where they can safely burn out on their own. Your grill will continue to smoke after cool down is complete, this is normal as the remaining pellets are burning out. It's extremely important to keep the lid closed during this process. Do not move until the grill is fully cooled. THE SHUT DOWN PROCESS IS VERY IMPORTANT. NEVER SHUT YOUR GRILLDOWN BY UNPLUGGING OR REMOVING FROM POWER VIA MASTER POWER SWITCH.

TIPS, TRICKS, AND TEMPS

Preheating

It is important to allow your grill to preheat to achieve your desired cooking temperature before cooking. This allows the entire grill to heat up and quickly return to your desired temperature once your food is introduced. If you do not allow the grill to preheat, you will find that it takes a longer period of time to bring both the grill and the food to your desired cooking temperature. It is important to leave the lid closed during preheating.

Pellet Information

STORE PELLETS IN A DRY SPACE – AWAY FROM FLAMMABLE MATERIALS AND HEATING SOURCES

USE ONLY WOOD-PELLET FUEL SPECIFIED FOR COOKING. DO NOT USE PELLET FUEL LABELED AS HAVING ADDITIVES

Premium hardwood pellets contain approximately 8,200 BTUs of heat per pound and leave less than 1% ash residue. Pellets should be stored in a dry area, as wet pellets will swell and turn back into sawdust. For the best results, always use premium hardwood pellets in your grill. The use of grades other than premium hardwood pellets may result in temperature variations, uneven cooking, and poor results. Remember, pellets do not contain preservatives and will deteriorate over time.

Caution: Some wood pellets produced for heating fuel have a high content of softwood which can include pitch and should not be used for cooking. Always check with the pellet manufacturer to ensure that you are cooking with a premium, 100% hardwood pellet.

Warming	150° to 180°
Smoking	180˚F to 275˚
Roasting	275˚F to 325˚F
Braising	325˚F to 375˚F
Baking	375˚F to 450˚F

TIPS, TRICKS, AND TEMPS

- Always use grill on a level surface and lock/secure wheels.
- Check and clean fire pot regularly; this will ensure proper ignition and heat output.
- Not all pellets are created equal; always use dry and fresh pellets.
- Always store pellets in a dry area.
- Get to know your grill and keep good cooking notes. This will help with consistency.
- Practice makes perfect.
- Always allow your meat to rest before serving.
- Always keep your cooking area clean.
- Avoid opening the door more than necessary.
- Wind can cool your grill temperature.
- Always preheat grill to desired temperature before use.
- Wipe off stainless steel surfaces before preheating; dirt and food stains can cook into surface.
- Always check pellet hopper for debris and remove excess pellet dust as needed.
- Leave at least one inch of clearance between food for even cooks (crowded foods will take longer to cook).
- Foods cooked in pans or containers will require more time than foods cooked directly on grate.
- Use your platinum-tipped meat probe to determine meat-doneness; never rely on time.
- Know your food's internal temperature.
- Use long-handled tongs and spatulas for turning meats; do not use plastic utensils.
- Do not use accessories not specified for use with this appliance.
- Injecting, mopping, and spritzing are great ways to keep meat from drying out.
- When going low and slow, plan for your meats to stall; larger pieces of meat tend to take longer from 160˚F-180˚F. Be patient.
- Never unplug your grill to turn it off.
- When not in use, unplug and cover with a recteq Premium Grill Cover.
- Use only compatible meat probes with your recteq controller.

TEMPERATURES

Remember, you can't tell whether meat is safely cooked by looking at it. Any cooked, uncured red meats (including pork) can be pink, even when the meat has reached a safe internal temperature.

After you remove the meat from your grill, allow it to rest.

- Hot foods should be held at 140˚F or warmer.
- Cold foods should be held at 40˚F or colder.
- Perishable foods should not be left out for more than 2 hours at room temperature; 1 hour when the temperature is above 90˚F.
- Always follow food safety guidelines provided by the USDA.

MAINTENANCE & CLEANING

- **CLEAN THE FIRE POT EVERY 3–5 COOKS OR AFTER EVERY 16-20 HOURS OF COOKING. FAILURE TO DO SO MAY CAUSE PRODUCT DAMAGE, MALFUNCTION, PERSONAL INJURY, OR PROPERTY DAMAGE.**
- PERIODICALLY CLEAN OUT VENTS/SMOKESTACK TO ENSURE PROPER AIRFLOW AND MAXIMUM PERFORMANCE.
- DISPOSAL OF ASHES - ASHES SHOULD BE PLACED IN A METAL CONTAINER WITH A TIGHT-FITTING LID. THE CLOSED CONTAINER OF ASHES SHOULD BE PLACED ON A NONCOMBUSTIBLE FLOOR OR ON THE GROUND, WELL AWAY FROM ALL COMBUSTIBLE MATERIALS, PENDING FINAL DISPOSAL. IF THE ASHES ARE DISPOSED OF BY BURIAL IN SOIL OR OTHERWISE LOCALLY DISPERSED, THEY SHOULD BE RETAINED IN THE CLOSED CONTAINER UNTIL ALL CINDERS HAVE THOROUGHLY COOLED.

- Use a grill brush to clean your cooking grate after every cook to provide years of trouble-free use.
  Note: Make sure that no bristles have shed onto the cooking grate.

- Use a mild soap and water to clean the exterior of your grill. AVOID USING CAUSTIC CLEANERS! ie: Ajax, Comet, etc.

- If left in an exposed area, keep your grill covered and unplugged when not in use.

- Never let your pellets get wet; they will swell and jam your auger.

- If the grill is not used for 6 weeks or more, it is advised to remove all pellets from hopper.

- Remove pots and pans while the operating appliance is unattended, to reduce the risk of fire.

Never store the grill in a small space or place in a vehicle unless completely cool and fire is verified as extinguished. Never move the grill while it is still hot. Never move the grill without assistance.

After completing a low and slow cook that has caused the accumulation of grease, you must clean and/or remove all grease accumulating items before cooking again. Failure to do so will most certainly cause a grease fire in your grill.

TROUBLESHOOTING

We pride ourselves on our grills, grilling accessories, and on our commitment to serve you. Please consult the chart below to help resolve issues you may encounter. Also, please don't hesitate to contact us with any issues.
(706) 922-0890

Issue	Potential Cause	Solution
Grill will not light/turn on	Power	Make sure power is plugged into working GFCI outlet, and outlet is not tripped. Unplug grill and check for blown fuse; refer to controller schematic on page 23.
	Fuse	Replace fuse manually and try again. Call Customer Service or visit recteq.com if problem persists.
	Igniter	Remove cooking grate, heat deflector, and drip pan; visually inspect fire pot and if after 10 minutes: •your pellets are feeding •your blower fan is running •your grill is still not lighting Then your igniter rod may need to be replaced. Call Customer Service. (706)922-0890
	Auger Motor	Remove cooking grate, heat deflector, and drip pan (if applicable); visually inspect auger turning in the fire pot. (Note: the auger turns very slowly) If auger is not turning, you may have an obstruction in your hopper. Clean out pellets and try again. If problem persists, your auger motor may need to be replaced. Call Customer Service. (706)922-0890
	Control Board	UNPLUG GRILL. Check to make sure the fuse is intact and has not blown. Check for any loose wire connections. If any wires have become detached, refer to controller schematic.

Issue	Potential Cause	Solution
Grill is smoking excessively/ smoke is discolored	Pellet quality/age	Inspect pellets; ensure that pellets are dry and have not broken down into sawdust. If problem persists, remove pellets from the hopper and clean ash from your firepot, then replace with fresh dry pellets.
	Excess ash in fire pot	Check the burn pot for ash and clean as necessary (it's advised to clean fire pot every 3-5 uses).
	Blower fan	Unplug grill. Remove access panel; visually inspect blower fan for any obstructions, loose connections, bugs, etc. Remove obstructions. Power grill on. If problem persists, unplug grill. Spin fan manually for several revolutions. Plug grill back in. If problem persists, your blower fan may need to be replaced. Call customer service. (706)922-0890
Grill will not heat up to or maintain proper temp	Pellet quality/age	Inspect pellets; ensure that pellets are dry and have not broken down into sawdust. If problem persists, remove pellets from the hopper and clean ash from your firepot, then replace with clean dry pellets.
	Insufficient airflow	Check firepot/smokestack/vents for any obstructions/ ash accumulation.
	Excess ash in fire pot	Check fire pot for ash and clear as necessary.
Fire continues to go out	Pellet quality/age	Inspect pellets; ensure that pellets are dry and have not broken down into sawdust. If problem persists, remove pellets from the hopper and clean ash from your firepot, then replace with clean dry pellets.
	Hopper obstruction	Unplug grill. Remove pellets from hopper. Clean hopper of any obstructions or build up.
	Pellet Bridge	Excessively long pellets and/or excess dust can cause pellets not to fall into the auger.

Issue	Potential Cause	Solution(s)
Pellets are not being delivered to fire pot	Hopper obstruction	Unplug grill. Remove pellets from hopper. Clean hopper of any obstructions or build up.
	Auger Failure/Jam	Remove cooking grate and heat deflector plate; visually inspect auger turning in the fire pot. (Note: the auger turns very slowly) If auger is not turning, you may have an obstruction in your hopper. Clean out pellets and try again. If problem persists, your auger motor may need to be replaced. Call Customer Service. (706)922-0890
Flare ups	Excessively greasy food while temperature setting is too high	Cook at 350ºF or below when cooking excessively fatty foods.
Excessive grease/build up	Excessively greasy food	Cook at 350ºF or below when cooking excessively fatty foods.
Smoke coming from hopper	Excess ash in firepot	Clean grill interior.
	Pellet level very low in hopper or excess dust in hopper/auger	Add more pellets to hopper or remove pellets and vacuum excess dust hopper.
	Grease buildup in vents/smokestack	Remove pellets from hopper and vacuum out hopper, auger tube, and fire pot.
ER-1	Power Failure	Make sure power is plugged into working GFCI outlet, and outlet is not tripped. Turn grill off, then back on again to reset controller and clear code.
ER-2	Grill hasn't ignited in over 30 minutes	Refer to "Grill will not light/turn on" in Troubleshooting.
ER-3	RTD unplugged/grill over heated	Check connection and let grill cool. Turn grill off, then back on again to reset controller and clear code.

TROUBLESHOOTING

In case of igniter failure, you can start your recteq manually:

1. Remove the stainless-steel grates, drip pan (if applicable), and heat deflector.
2. Clean out fire pot and place no more than 1/2 cup of pellets in the bottom. Add a small amount of solid fuel fire starter, such as those made from sawdust and wax, or use wood shavings.

   Tip: A paper towel, shredded cardboard, or shredded newspaper can work as a substitute.

If you have a torch lighter, a fire starter is not needed.

3. Light the fire starter.
4. After the pellets are burning briskly, turn on your grill. If your fire goes out, repeat steps 1-4.
5. If your fire stays lit, replace the stainless heat deflector, drip pan, and cooking grates then close the lid.

Be careful not to touch the fire.

CAUTION: Do not use flammable liquids such as gasoline, gasoline-type lantern fuel, kerosene, charcoal lighter fluid, or similar liquids to start or freshen-up the fire! Keep all such liquids well away from the grill while it is in use.

IF YOU HAVE NEED ASSISTANCE, PLEASE CONTACT OUR U.S. BASED CUSTOMER SUPPORT CENTER (706)922-0890

WARRANTY

This limited warranty covers the Staq 1900 Wood Pellet Grill manufactured by "recteq, LLC." The Staq carries a 4-year limited warranty from the date of purchase by the original owner against defects in material and workmanship when subjected to normal residential use. Limited warranty does not apply to paint, griddle cover, or damage caused from corrosion.

Conditions of Limited Warranty

1. During the term of the limited warranty, recteq, LLC's obligation shall be limited to replacement of covered, failed components. recteq will repair or replace parts returned to recteq, freight prepaid, if the part(s) are found by recteq to be defective upon examination. recteq shall not be liable for transportation charges, labor costs, or export duties.
2. recteq takes every precaution to utilize materials that retard rust including the use of high temperature paint and stainless steel where advisable. Even with these safeguards, the protective coatings can be compromised by various substances and conditions beyond recteq's control. High temperatures, excessive humidity, chlorine, industrial fumes, fertilizers, lawn pesticides, and salt are some of the substances that can affect paint and metal coatings. For these reasons, the limited warranties DOES NOT COVER RUST OR OXIDATION FOR ANY REASON.
3. The warranty is based on residential use. Warranty coverage does not apply to products used in commercial applications.

Exceptions to the Limited Warranty

There is no written or implied performance warranty on recteq, as the manufacturer has no control over the installation, operations, cleaning, maintenance or the type of fuel burned. This limited warranty will not apply nor will recteq assume responsibility if your product has not been installed, operated, cleaned, and maintained in strict accordance with the manufacturer's instructions. The warranty does not cover damage or breakage due to misuse, improper handling, or modifications. NEITHER THE MANUFACTURER, NOR THE SUPPLIERS TO THE PURCHASER ACCEPTS RESPONSIBILITY, LEGAL OR OTHERWISE, FOR THE INCIDENTAL OR CONSEQUENTIAL DAMAGE TO THE PROPERTY OR PERSONS RESULTING FROM THE USE OF THIS PRODUCT. ANY WARRANTY IMPLIED BY LAW, INCLUDING BUT NOT LIMITED TO IMPLIED WARRANTIES OF MERCHANTABILITY OR FITNESS, SHALL BE LIMITED TO FOUR (4) YEARS FROM THE DATE OF ORIGINAL PURCHASE. WHETHER A CLAIM IS MADE AGAINST THE MANUFACTURER BASED ON THE BREACH OF THIS WARRANTY OR ANY OTHER TYPE OF WARRANTY EXPRESSED OR IMPLIED BY LAW, MANUFACTURER SHALL IN NO EVENT BE LIABLE FOR ANY SPECIAL, INDIRECT, CONSEQUENTIAL, OR OTHER DAMAGES OF ANY NATURE WHATSOEVER IN EXCESS OF THE ORIGINAL PURCHASE PRICE OF THIS PRODUCT. ALL WARRANTIES BY MANUFACTURER ARE SET FORTH HEREIN AND NO CLAIM SHALL BE MADE AGAINST MANUFACTURER ON ANY ORAL WARRANTY OR REPRESENTATION. Some states do not allow the exclusion or limitation of incidental or consequential damages, or limitations of implied warranties, so the limitations or exclusions set forth in this limited warranty may not apply to you. This limited warranty gives you specific legal rights and you may have other rights, which vary from state to state.

The limited warranty for four (4) years is in lieu of all other warranties expressed or implied, at law or otherwise, and recteq does not authorize any person or representative to assume for recteq any obligation or liability in connection with the sale of this product. This means that no warranties, either expressed or implied, are extended to persons who purchase the product from anyone other than recteq or an authorized recteq Distributor.

Procedure for Warranty Service

Call recteq (706)922-0890 for repair or replacement of your covered parts. Be prepared to furnish the following information.

- Purchaser's name, model, and serial number of griddle, and date of purchase.
- An accurate description of the problem.